ACCELERATOR CONTROL, FUEL & EXHAUST SYSTEMS

SECTION FE

FE

CONTENTS

ACCELERATOR CONTROL SYSTEM 2
Adjusting Accelerator Wire 2
FUEL SYSTEM 3
Fuel Pump and Gauge 4
EXHAUST SYSTEM 5

CAUTION:

- **When removing accelerator wire, make a mark to indicate lock nut's initial position.**
- **Check that throttle valve opens fully when accelerator pedal is fully depressed. Check that throttle valve returns to idle position when accelerator pedal is released.**
- **Check accelerator control parts for improper contact with any adjacent parts.**
- **When connecting accelerator wire, be careful not to twist or scratch wire.**
- **For adjustment of A/T throttle wire, refer to in AT section ("Throttle Wire Adjustment", "ON-VEHICLE SERVICE").**

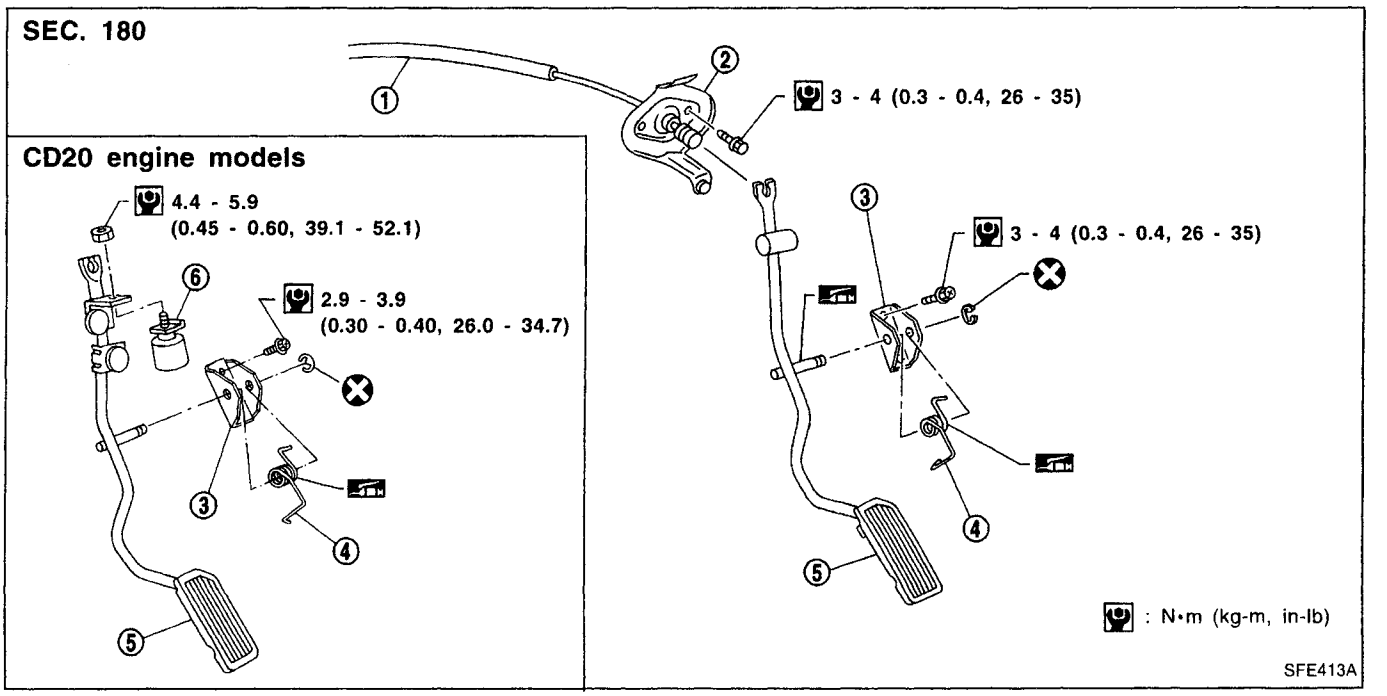

① Accelerator wire
② Wire bracket
③ Pedal bracket
④ Return spring
⑤ Accelerator pedal
⑥ Dynamic damper

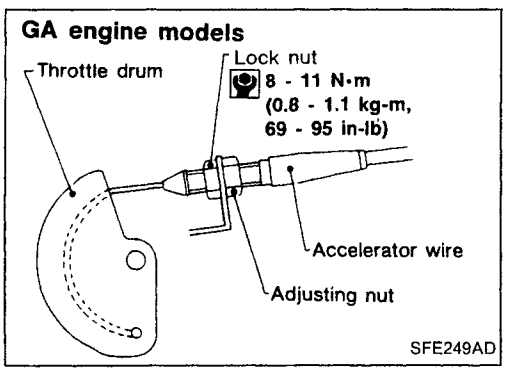

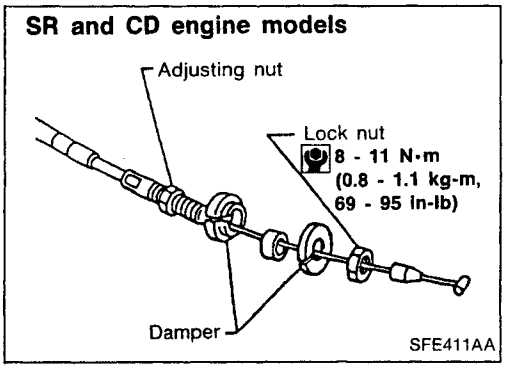

Adjusting Accelerator Wire

1. Loosen lock nut, and tighten adjusting nut until throttle drum starts to move.
2. From that position turn back adjusting nut 1.5 to 2 turns, and secure lock nut.

WARNING:
When replacing fuel line parts, be sure to observe the following:
- **Put a "CAUTION: INFLAMMABLE" sign in workshop.**
- **Do not smoke while servicing fuel system. Keep open flames and sparks away from work area.**
- **Be sure to disconnect battery ground cable before conducting operations.**
- **Be sure to furnish workshop with a CO_2 fire extinguisher.**
- **Put drained fuel in an explosion-proof container and put lid on securely.**

CAUTION:
- **For ECCS engine models, release fuel pressure from fuel line. Refer to EC section ("Fuel Pressure Release", "BASIC SERVICE PROCEDURE").**
- **Do not disconnect any fuel line unless absolutely necessary.**
- **Plug hose and pipe openings to prevent entry of dust or dirt.**
- **Always replace O-ring and clamps with new ones.**
- **Do not kink or twist hose and tube when they are installed.**
- **Do not tighten hose clamps excessively to avoid damaging hoses.**
- **When installing fuel check valve, be careful of its designated direction. Refer to EC section ("FUEL CHECK VALVE", "EVAPORATIVE EMISSION SYSTEM").**
- **After installation, run engine and check for fuel leaks at connections.**

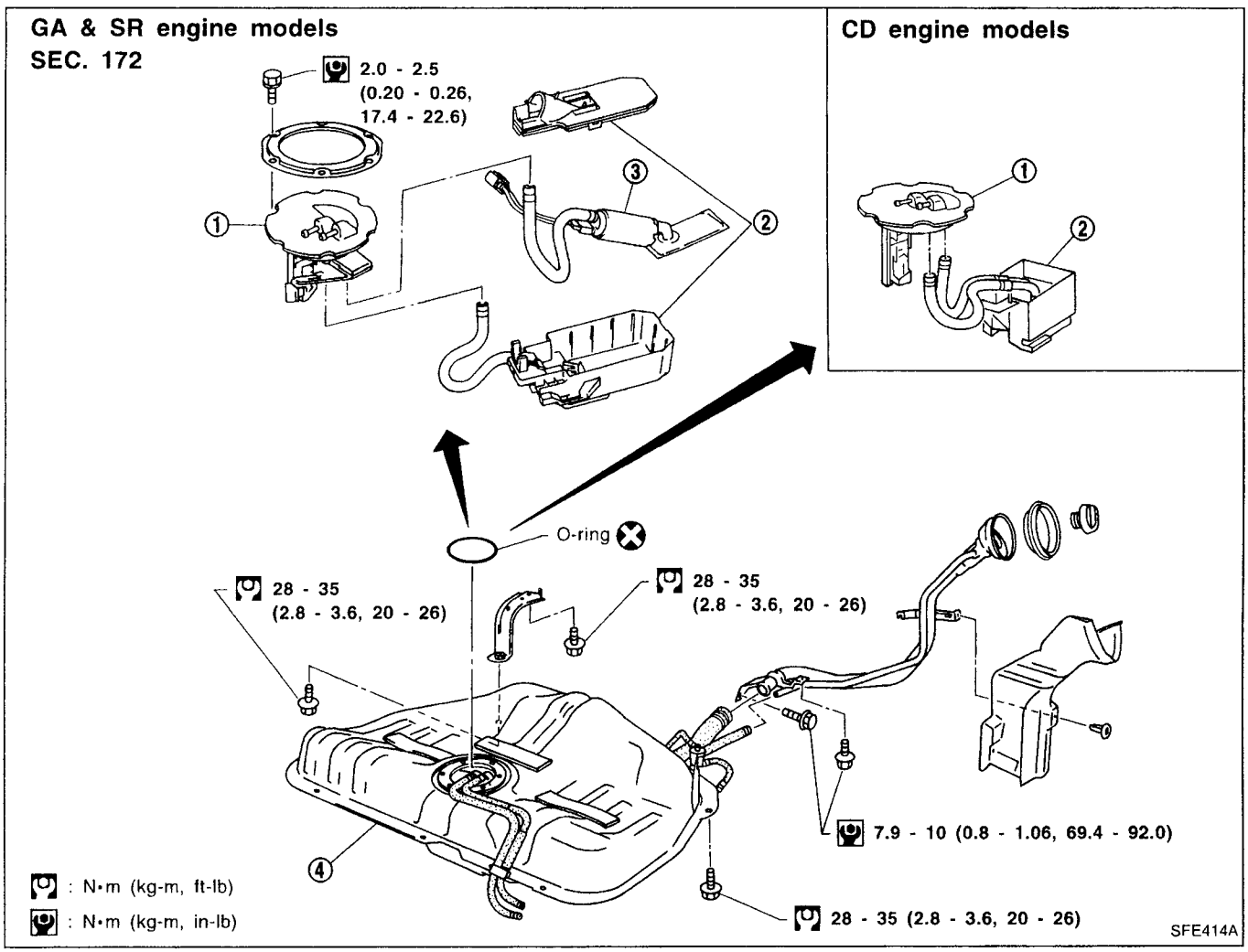

① Fuel gauge
② Chamber
③ Fuel pump
④ Fuel tank

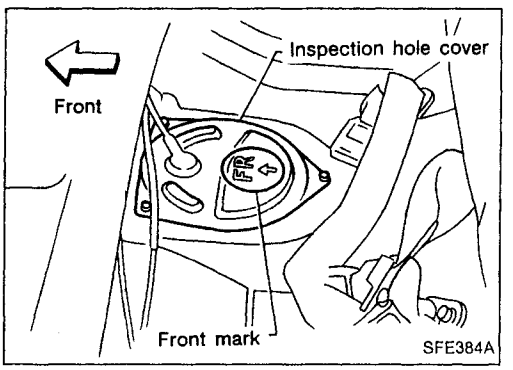

Fuel Pump and Gauge

REMOVAL

1. Release fuel pressure from fuel line.
   Refer to EC section ("Fuel Pressure Release", "BASIC SERVICE PROCEDURE").
2. Remove inspection hole cover located under the rear seat.

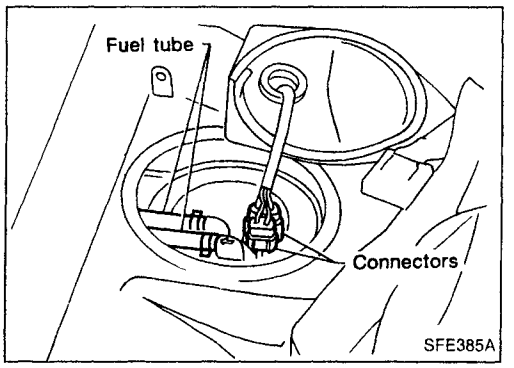

3. Disconnect fuel outlet, return tube and connectors.
4. Remove the six screws.

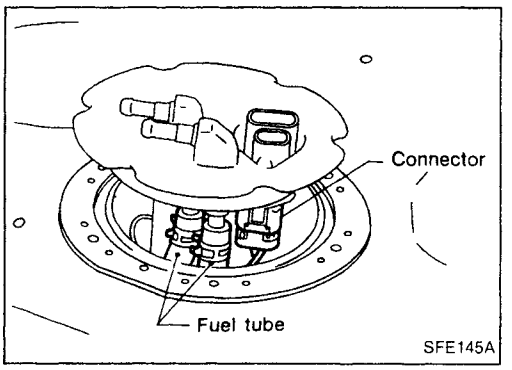

5. Remove fuel gauge assembly and disconnect tubes and connector.

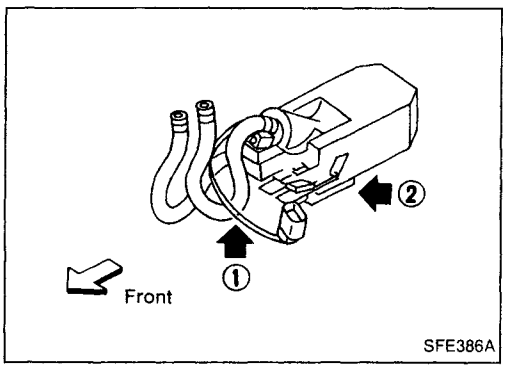

6. Remove fuel pump with fuel tank chamber as shown in the figure.

a. Pull up the front of fuel pump.
b. Slide it forward.

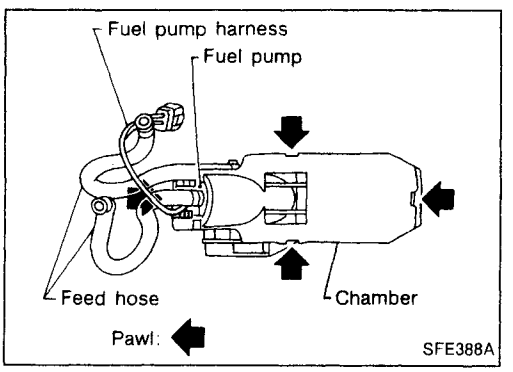

7. Remove fuel tank chamber from fuel pump.

INSTALLATION

To install, reverse the removal procedure.

CAUTION:

- **Tighten to specified torque.**
- **Install fuel pump harness on the left side of the feed hose as shown in the figure.**

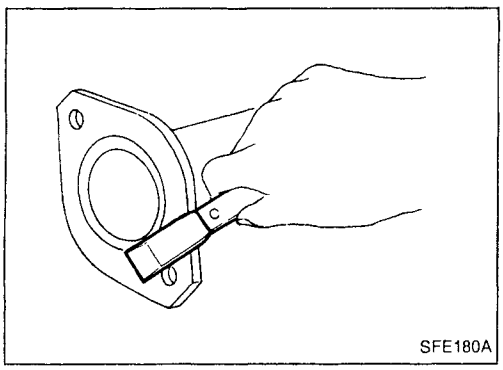

CAUTION:

- **Always replace exhaust gaskets with new ones when reassembling.**
  If gasket is left on flange surface, scrape off completely as shown at left.
- **With engine running, check all tube connections for exhaust gas leaks, and entire system for unusual noises.**
- **After installation, check to ensure that mounting brackets and mounting insulators are free from undue stress. If any of the above parts are not installed properly, excessive noise or vibration may be transmitted to the vehicle body.**

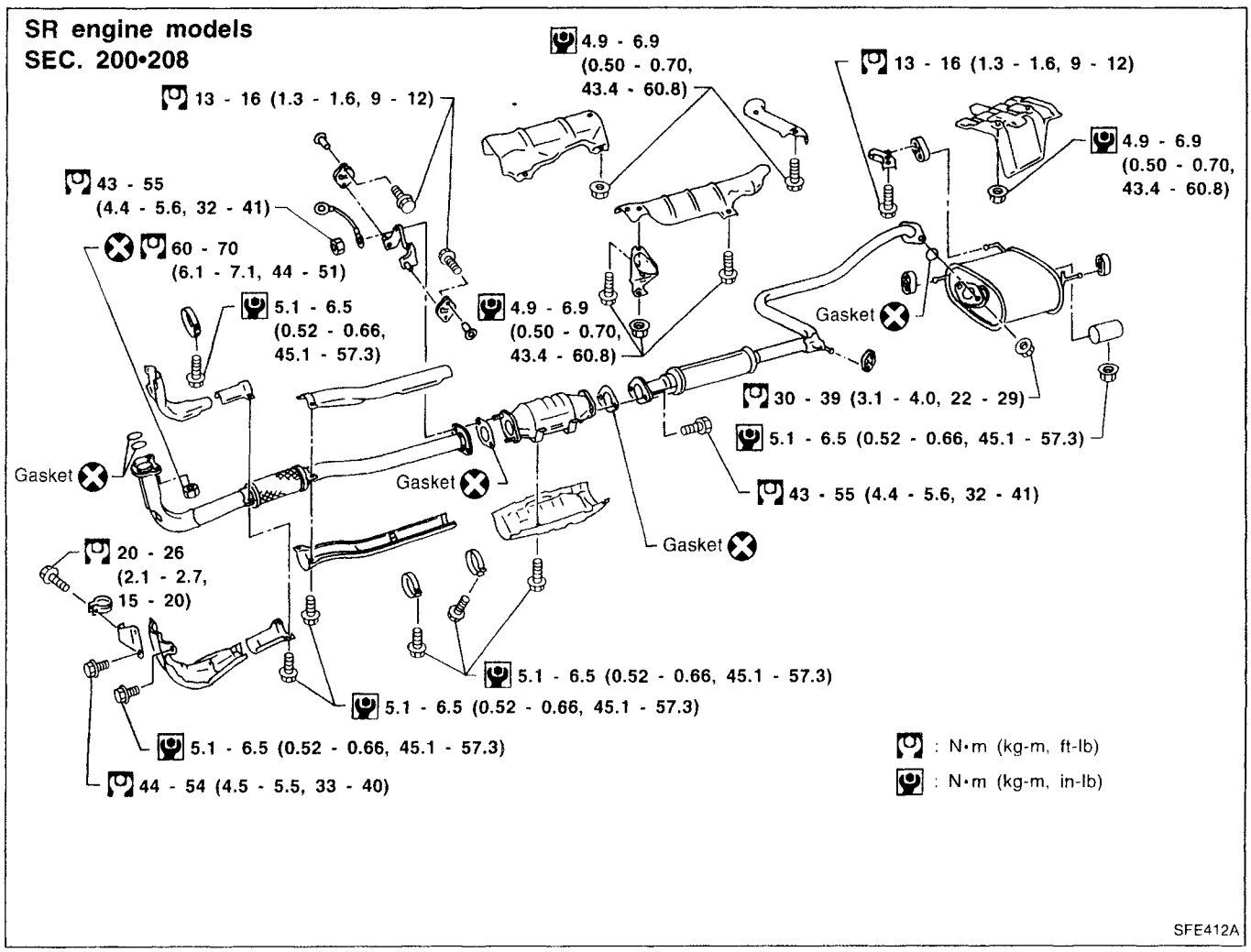

FE

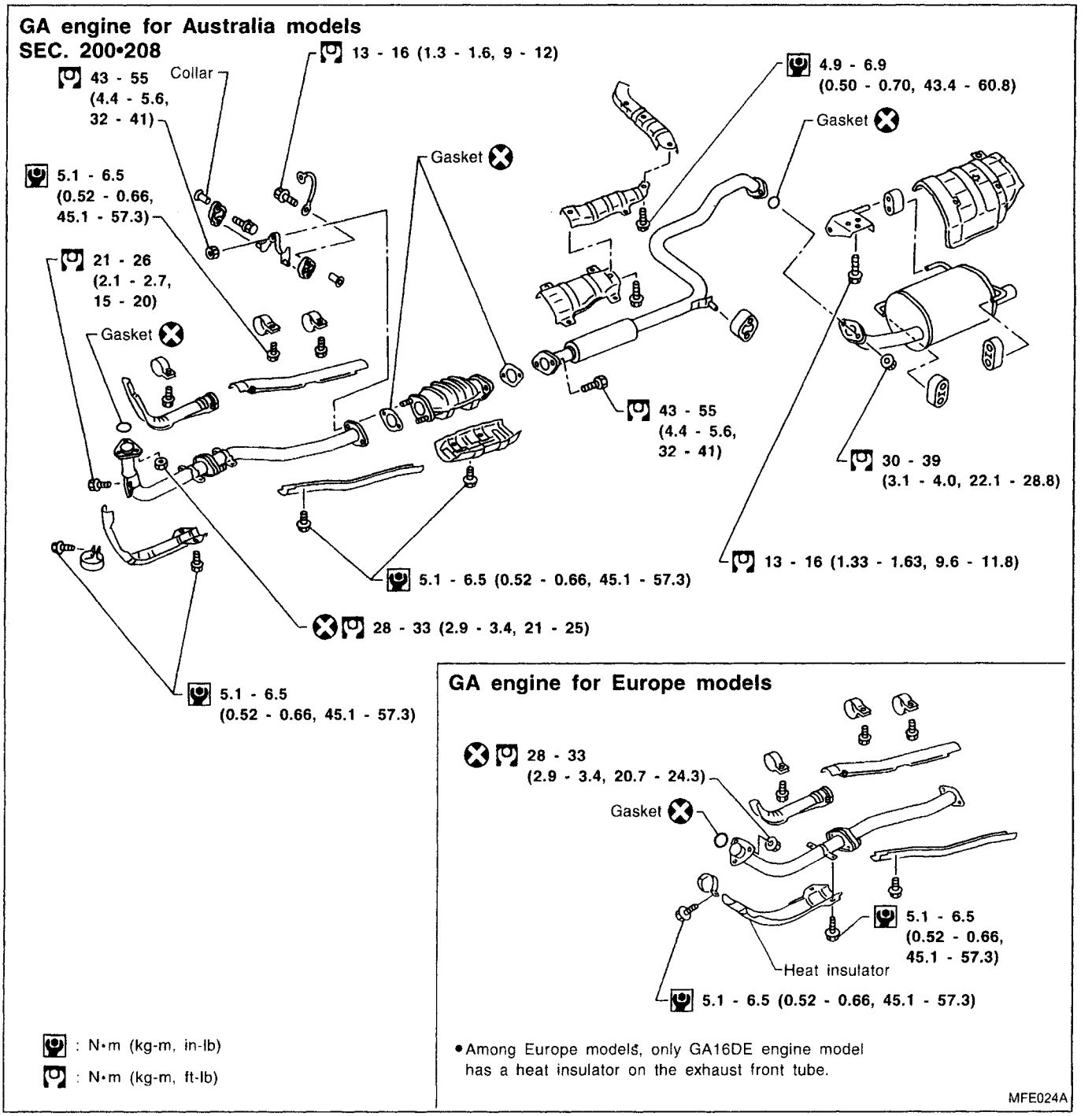
GA engine for Australia models
SEC. 200•208
43 - 55 (4.4 - 5.6, 32 - 41)
Collar
13 - 16 (1.3 - 1.6, 9 - 12)
4.9 - 6.9 (0.50 - 0.70, 43.4 - 60.8)
Gasket
Gasket
5.1 - 6.5 (0.52 - 0.66, 45.1 - 57.3)
21 - 26 (2.1 - 2.7, 15 - 20)
Gasket
43 - 55 (4.4 - 5.6, 32 - 41)
30 - 39 (3.1 - 4.0, 22.1 - 28.8)
13 - 16 (1.33 - 1.63, 9.6 - 11.8)
5.1 - 6.5 (0.52 - 0.66, 45.1 - 57.3)
28 - 33 (2.9 - 3.4, 21 - 25)
5.1 - 6.5 (0.52 - 0.66, 45.1 - 57.3)
GA engine for Europe models
28 - 33 (2.9 - 3.4, 20.7 - 24.3)
Gasket
5.1 - 6.5 (0.52 - 0.66, 45.1 - 57.3)
Heat insulator
5.1 - 6.5 (0.52 - 0.66, 45.1 - 57.3)
: N•m (kg-m, in-lb)
: N•m (kg-m, ft-lb)
•Among Europe models, only GA16DE engine model has a heat insulator on the exhaust front tube.
MFE024A

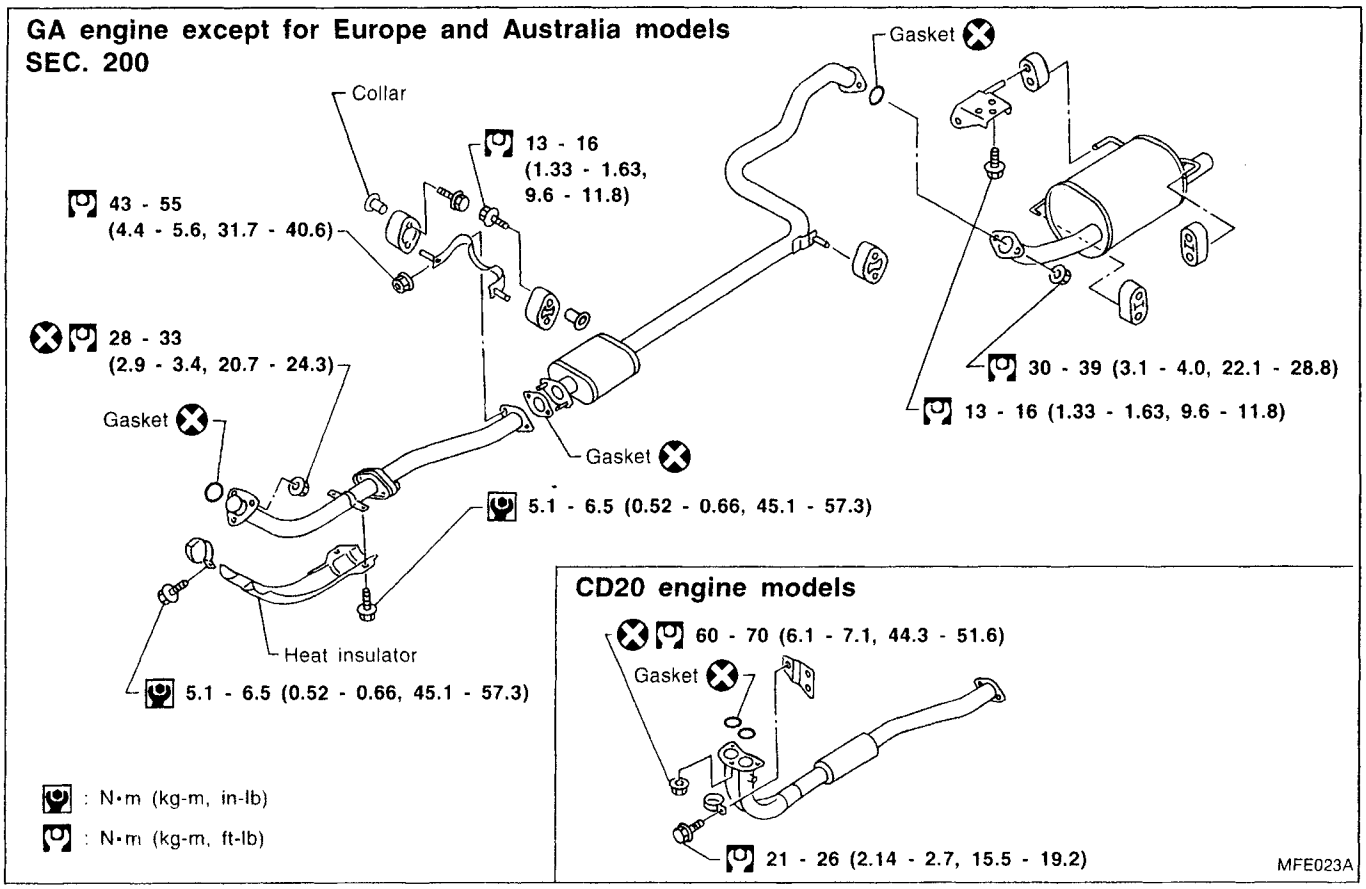
GA engine except for Europe and Australia models
SEC. 200
Collar
13 - 16
(1.33 - 1.63,
9.6 - 11.8)
43 - 55
(4.4 - 5.6, 31.7 - 40.6)
28 - 33
(2.9 - 3.4, 20.7 - 24.3)
Gasket
Gasket
Gasket
5.1 - 6.5 (0.52 - 0.66, 45.1 - 57.3)
Heat insulator
5.1 - 6.5 (0.52 - 0.66, 45.1 - 57.3)
30 - 39 (3.1 - 4.0, 22.1 - 28.8)
13 - 16 (1.33 - 1.63, 9.6 - 11.8)
: N•m (kg-m, in-lb)
: N•m (kg-m, ft-lb)
CD20 engine models
60 - 70 (6.1 - 7.1, 44.3 - 51.6)
Gasket
21 - 26 (2.14 - 2.7, 15.5 - 19.2)
MFE023A

FE